# INSTRUCTIONS FOR REMOVING A RECORD PLAYER TURNTABLE WHICH HAS SEIZED ON THE TURNTABLE SPINDLE

1. Allow the unit to be cool, i.e. the spindle and turntable bearing not to be warm due to friction or by operating the unit.

2. Apply a small quantity of penetrene to the hole in the top of the spindle.

3. Fasten the pick-up to its rest pillar, then turn the unit upside down.

4. Insert a wedge between the cabinet and the turntable metal motor mount plate. Do not press the wedge in too far to avoid undue strain on the motor mounting.

5. Dip a piece of rigid wire into the penetrene to form a blob of penetrene on the end of the wire. Insert the wire between the cabinet and the motor mount plate and apply the penetrene to the junction of the turntable spindle and the turntable boss (where the spindle enters the boss).

6. After about 10 minutes, remove wedge and turn unit right-side up.

7. The turntable revolves on a fixed spindle. Ease turntable up and around on spindle; do not use great force. If the turntable does not move repeat para. 2 to 6.

8. When the turntable is removed, apply to the spindle a slight application of light oil (sewing machine oil or SAE20). The spindle may be given a rub or two with very fine emery paper before applying the oil if the turntable was difficult to remove.

9. No further seizure of the turntable on the spindle should be encountered once the oil is applied to the spindle.

10. Under no circumstances allow oil to be placed on the rubber drive pulley or the inside rim of the turntable.

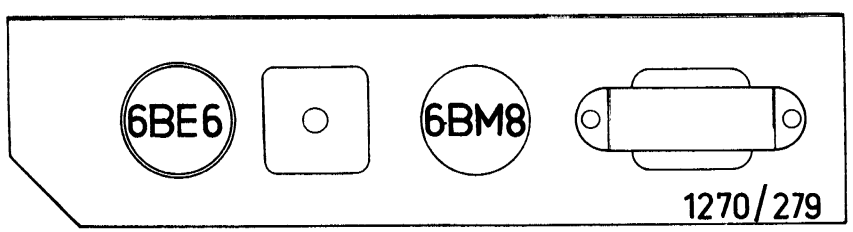




RADIO CORPORATION PTY. LTD.
DIVISION OF ELECTRONIC INDUSTRIES LTD.
126-130 GRANT STREET, SOUTH MELBOURNE, S.C.4.
TECHNICAL BULLETIN

# PLAY-GRAM MODEL "CML"

A 2 VALVE SUPERHETERODYNE BROADCAST RECEIVER AND A 4 SPEED (16⅔, 33⅓, 45 and 78 R.P.M.) SINGLE RECORD PLAYER.

**FOR OPERATION FROM:**

200-240 Volt 50 Cycle Supply Mains (Power Transformer T148)
Power Trans. Primary Mains Tap-red-common.
,, ,, ,, ,, ,, -green 200V. mains
,, ,, ,, ,, ,, -black 230 & 240V. mains.

230-250 Volt 40 Cycle Supply Mains (Power Transformer T149)
Power Trans. Primary Mains Tap-red-common.
,, ,, ,, ,, ,, -green 230V. mains
,, ,, ,, ,, ,, -black 250V. mains.

**POWER CONSUMPTION:**

Radio Operation: 18 Watts.-approx.
Gramo Operation: 38 Watts.-approx.

**TUNING RANGE:**

535-1640 Kc/s.: 560.7-182.9 Metres.

**IF. TRANS.**

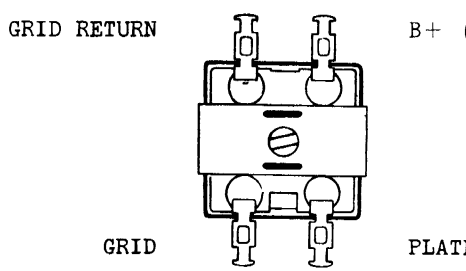


**ANTENNA TRANS.:**

Start of winding - furthest from mounting end - Junction of circuit Nos. 9, 10 & 30.
Finish of winding - nearest to mounting end - Signal grid.

**OSCL. COIL:**

Start of winding - furthest from mounting end - Oscl. grid.
Finish of winding - nearest to mounting end - Junction of circuit Nos. 3 & 8.

# MODEL CML.

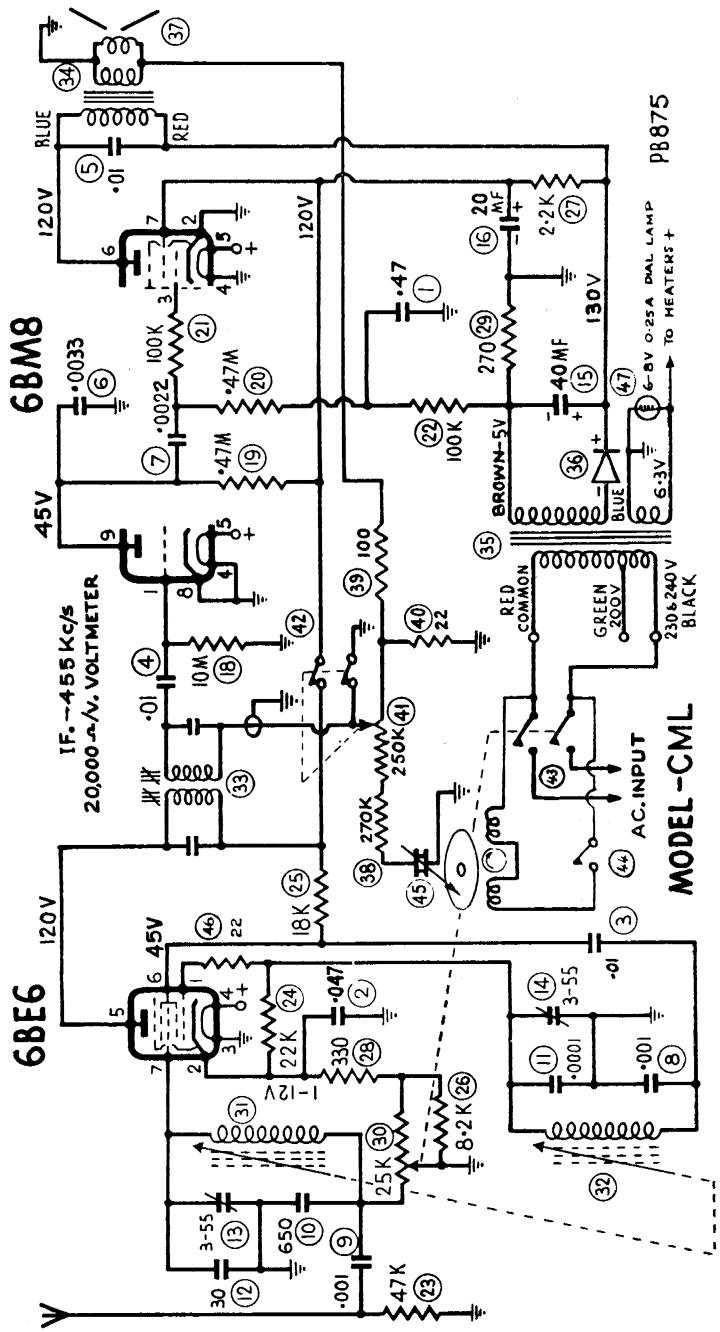


## ALIGNMENT PROCEDURE:

### EQUIPMENT:

Signal Generator:
Output Meter:
Mica Capacitor: 0.01MF (for IF. trans. alignment)
Dummy Antenna: 200MMF Mica Capacitor
Straight Alignment Tool: Type PM581
Flexible Alignment Tool: Type 48/712

### ALIGNMENT CONDITIONS:

Load Impedance: 7,000 ohms.
Output Level: 50 Milliwatts
Vol. Control: Max. Vol. fully clockwise
Intermed. Freq.: 455 Kc/s.
Input Voltage: 230 Volts 50 Cycle AC. input to trans. 230-240 volt pri. tap

**NOTE 1:**

Dummy Antenna: The 200 MMF dummy antenna must not be connected to the free end of the 25 ft. antenna during alignment. The dummy antenna must be connected to the junction lug on the chassis. It is not necessary to have the 25 ft. antenna connected to the receiver during alignment. If the 25 ft. antenna is connected it should be fully rolled up into a small hank.

**NOTE 2:**

The motor mount plate has to be removed from the cabinet to align the IF transformer and RF signal circuits.

1. Unscrew and remove the five screws A, B, C, D & E shown on the drawing on Page 9.
2. Lift up rear edge of motor mount plate and at the same time slide motor mount plate towards rear of cabinet so that mount plate disengages with a bracket on inside of front of cabinet.

| Operation No. | Generator Connection | Generator Frequency | Dummy Antenna | Instructions |
|---|---|---|---|---|
| 3. | To control grid of 6BE6 valve (pin No. 7) | 455 Kc/s. | 0.01MF Mica capacitor in series with generator. | Turn tuning drum until perm. tuner iron cores are out of the windings on coil formers and the unit is hard against the stop. Leave grid wire attached to valve socket. Peak IF. trans. pri. and sec. for max. output. |

**DIAL DRUM SETTING:**

Turn dial drum toward the rear of motor mount plate until the perm. tuner iron cores are out of the windings on the coil formers and the unit is hard against the stop. The end of travel spot on dial reading near 1700 Kc/s. is to align with the indicator arrows moulded on the top of the motor mount plate. The dial drum is adjusted by loosening off the screw in the centre of the drum and is accessible through the slot in the drum.

| | | | | |
|---|---|---|---|---|
| 4. | To antenna junction lug on chassis. | 1000 Kc/s. | 200MMF Mica capacitor in series with generator. | Turn tuning drum until alignment spot at 1000 Kc/s. aligns with moulded arrows on top of motor plate. Peak oscl. coil trimmer cond., then peak antenna coil trimmer cond. for max. output. Re-peak oscl. coil trim condenser. |

5. Tuning range after alignment 535-1640 Kc/s.
6. Refit motor mount plate with receiver attached to the cabinet.

**NOTE:**

Both iron cores are pre-set at the factory to an exact dimension of 2.275" between the extreme end of the former protruding through the rubber grommet, and the end of the iron core in the former, when the unit is turned hard against the stop.

If incorrect logging and misalignment are to be avoided, no adjustment of the iron cores must be made to vary this dimension. Both iron cores must have the same colour identification spot on the end of the iron core.